ROBA®-switch / Type 017._00.2

Application

ROBA®-switch fast acting rectifiers are used to connect DC consumers to alternating voltage supplies, for example electromagnetic brakes and clutches (ROBA-stop®, ROBA®-quick, ROBATIC®) as well as electromagnets, electrovalves, etc.

Fast acting rectifier ROBA®-switch 017._00.2

- Consumer operation with overexcitation or power reduction
- Input voltage: 100 - 500 VAC
- Maximum output current: 3 A at 250 VAC
- UL-approved

Function

The ROBA®-switch is used for operation at an input voltage of between 100 and 500 VAC, depending on the size. It can switch internally from bridge rectification output voltage to half-wave rectification output voltage. The bridge rectification time can be modified from 0.05 to 2 seconds by exchanging the external resistor (R_{ext}).

Electrical Connection (Terminals)

1 + 2	Input voltage (fitted protective varistor)
3 + 4	Connection for external contact for DC-side switch-off
5 + 6	Output voltage (fitted protective varistor)
7 + 8	R_{ext} for bridge rectification time adjustment

Technical Data

Input voltage	see Table 1
Output voltage	see Table 1
Protection	IP65 components, IP20 terminals, IP10 R_{ext}
Terminal nom. cross-section	1.5 mm² (AWG 22-14)
Ambient temperature	-25 °C up to +70 °C
Storage temperature	-40 °C up to +105 °C

ROBA®-switch Sizes, Table 1

	Size			
	Type 017.000.2		Type 017.100.2	
	10	20	10	20
Input voltage VAC ± 10 %	100 - 250	200 - 500	100 - 250	200 - 500
Output voltage VDC, U_{bridge}	90 - 225	180 - 450	90 - 225	180 - 450
Output voltage VDC, $U_{half\text{-}wave}$	45 - 113	90 - 225	45 - 113	90 - 225
Output current I_{RMS} at ≤ 45 °C, (A)	2.0	1.8	3.0	2.0
Output current I_{RMS} at max. 70 °C, (A)	1.0	0.9	1.5	1.0
Conformity markings	c UL us CE	c UL us up to 300 V CE	c UL us CE	c UL us CE

Order Number

__ / 0 1 7 . __ 0 0 . 2

Size	UL-approved
10	0 up to 300 V
20	1 up to 500 V

c UL us E189728 CE

Dimensions (mm)

Type 017.000.2

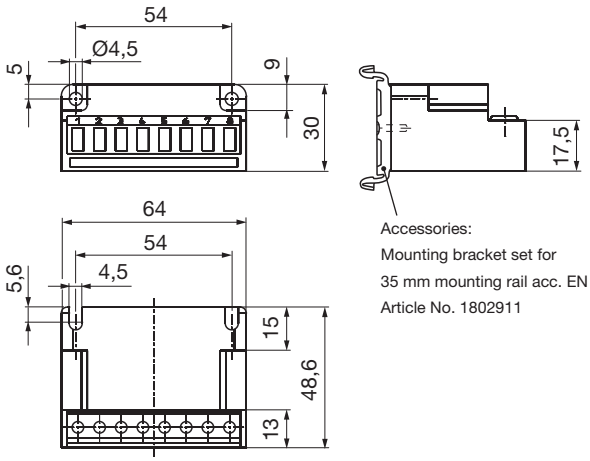

Accessories:
Mounting bracket set for
35 mm mounting rail acc. EN 60715
Article No. 1802911

Type 017.100.2

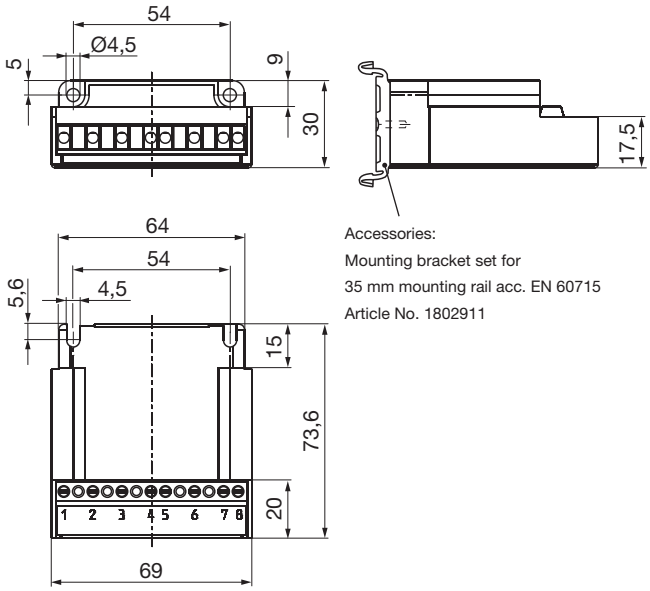

Accessories:
Mounting bracket set for
35 mm mounting rail acc. EN 60715
Article No. 1802911